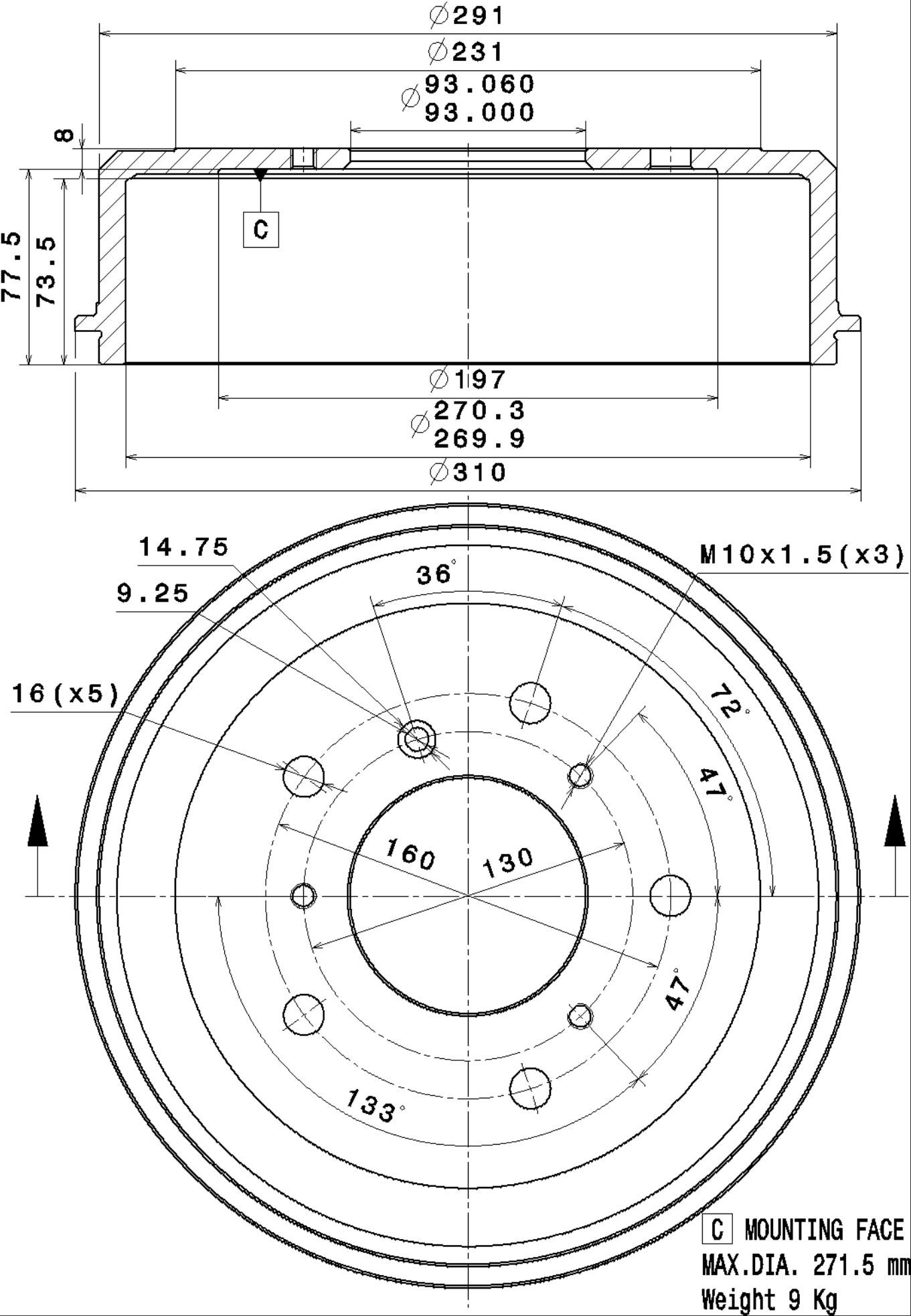
∅291
∅231
∅93.060
93.000
8
77.5
73.5
C
∅197
∅270.3
269.9
∅310
14.75
9.25
16(x5)
36°
M10x1.5(x3)
72°
47°
160
130
47°
133°
C MOUNTING FACE
MAX.DIA. 271.5 mm
Weight 9 Kg