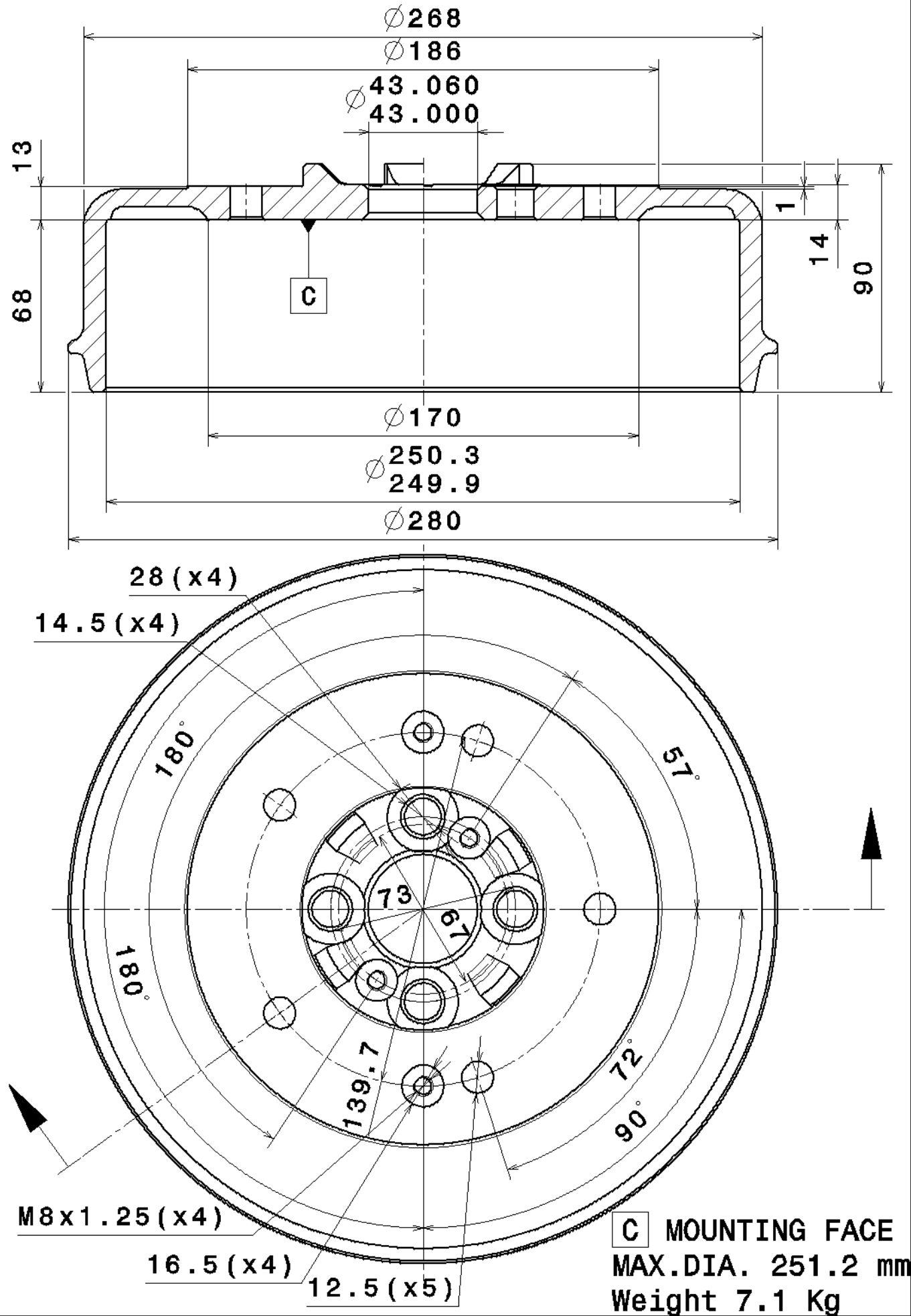
∅268
∅186
∅43.060
43.000
13
1
14
90
68
C
∅170
∅250.3
249.9
∅280
28 (x4)
14.5 (x4)
180°
57°
73
67
180°
139.7
72°
90°
M8x1.25 (x4)
16.5 (x4)
12.5 (x5)
C MOUNTING FACE
MAX.DIA. 251.2 mm
Weight 7.1 Kg