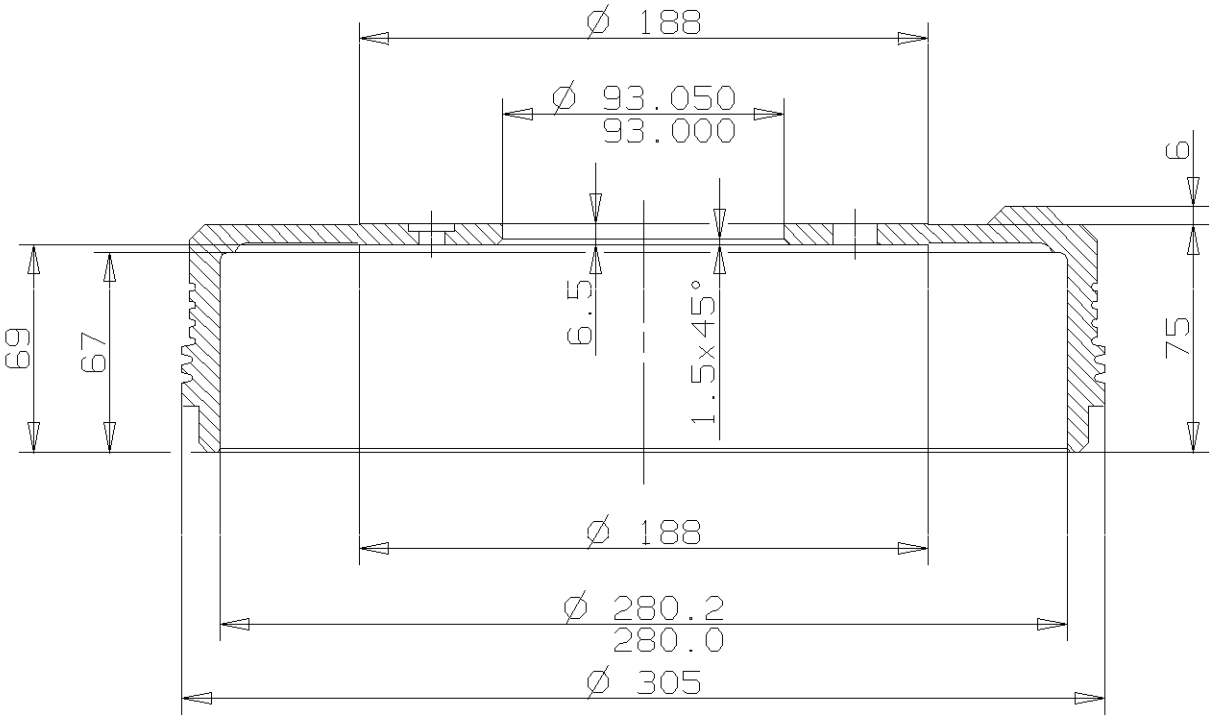

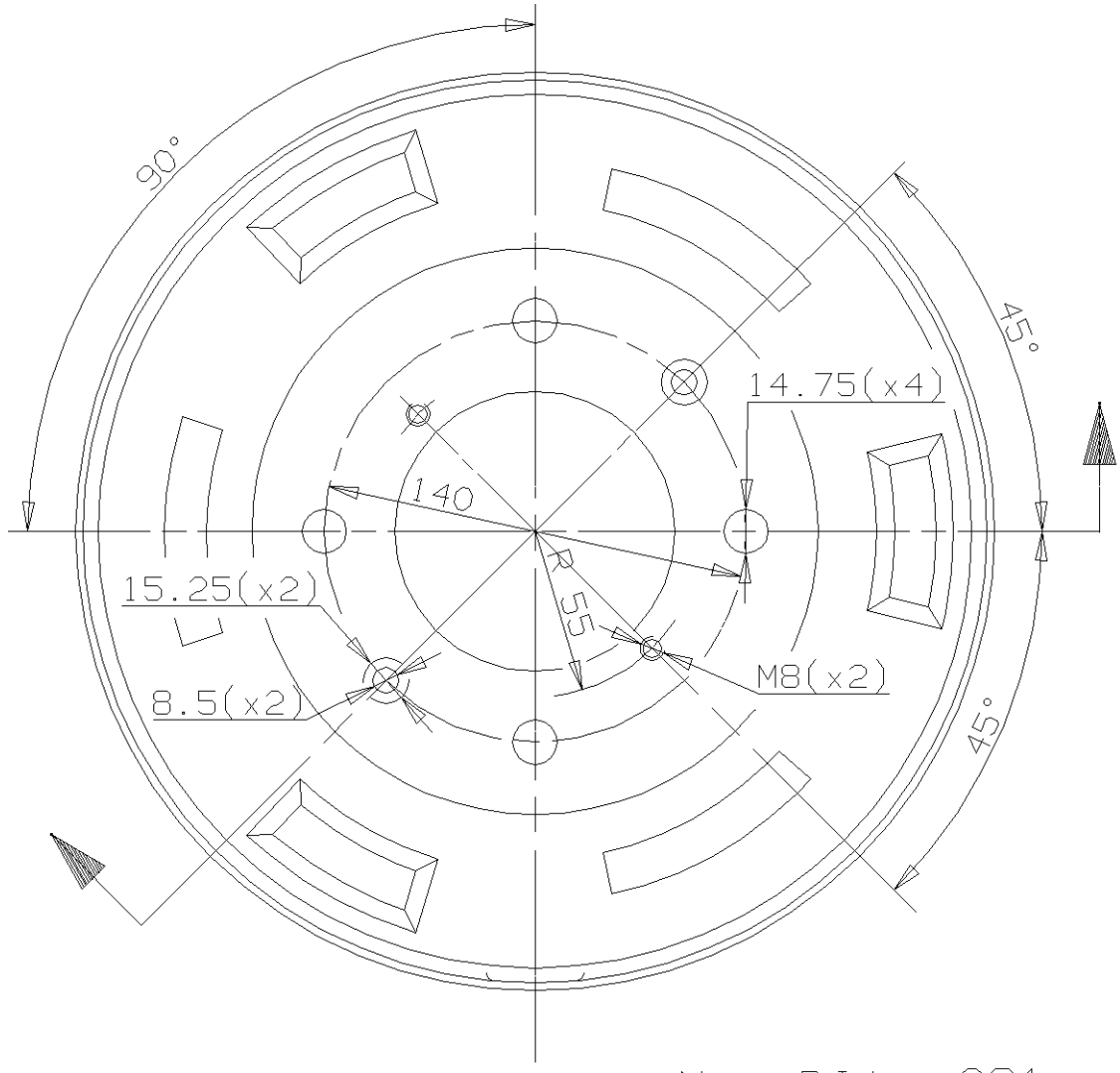

Max.DIA. 281 mm

Weight 6.8 Kg