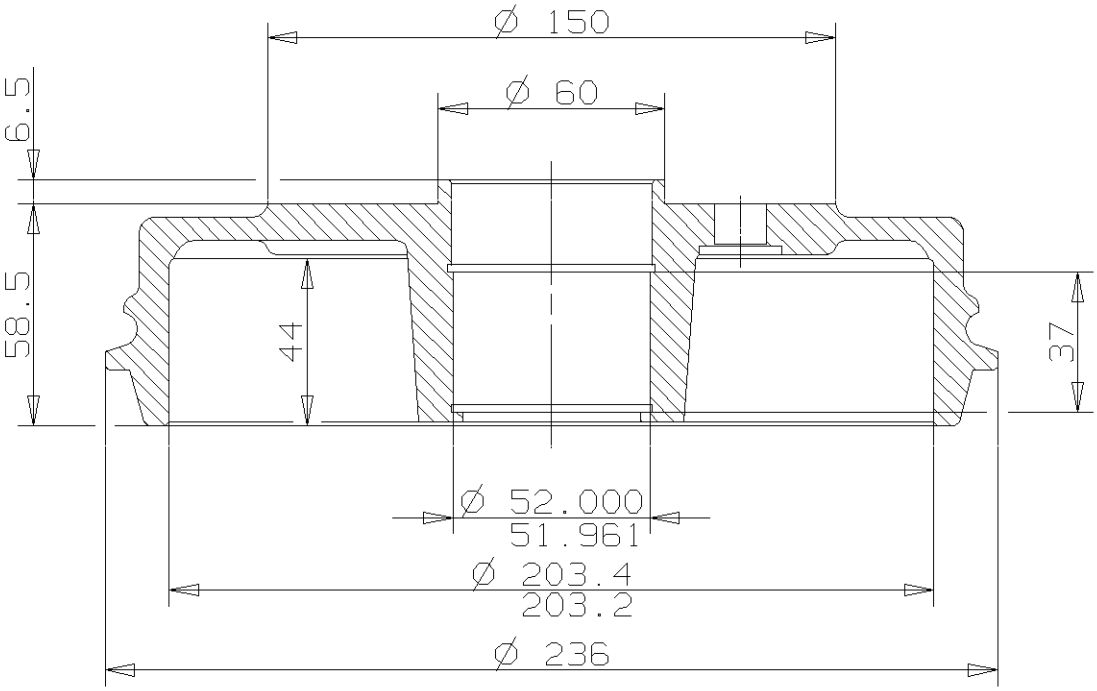

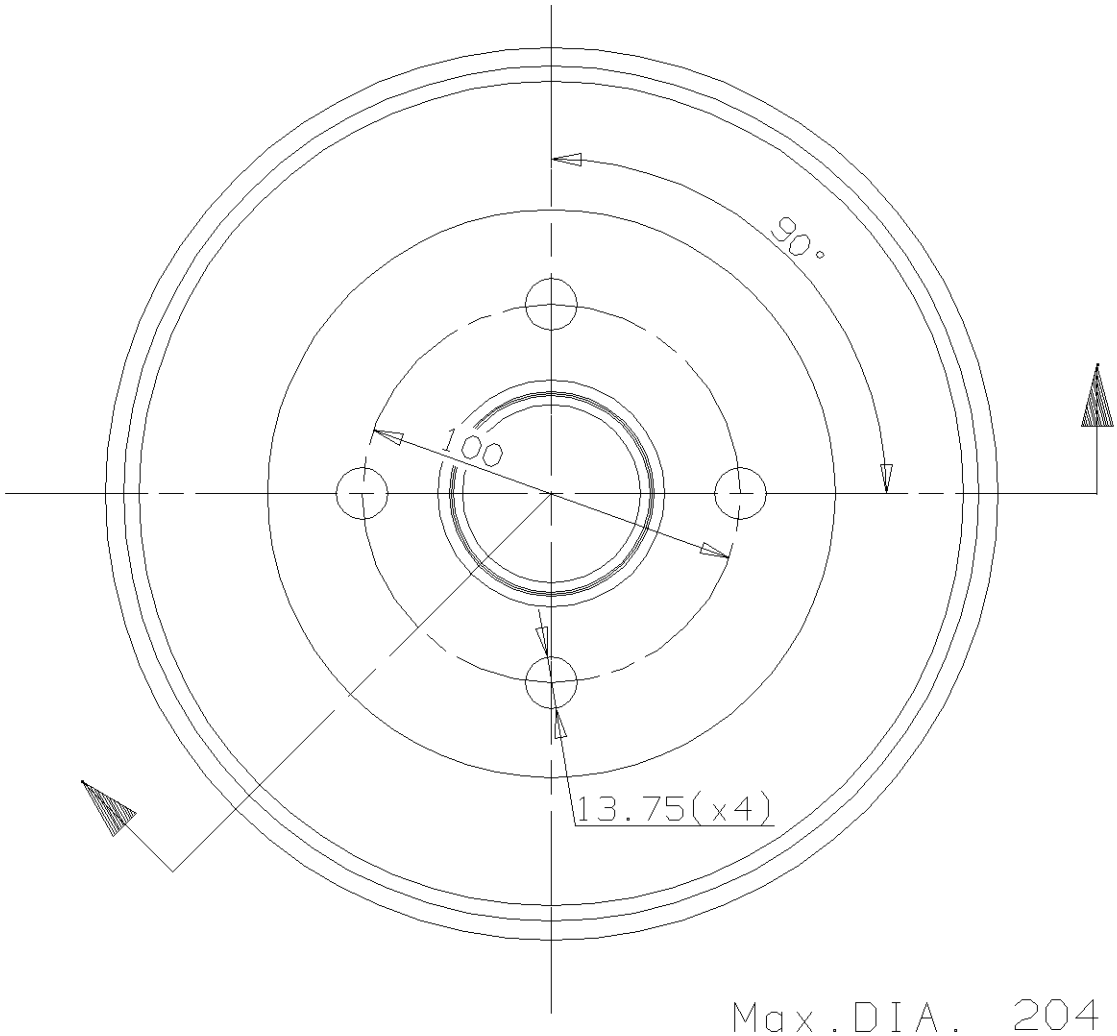

Max.DIA. 204 mm

Weight 5.1 Kg