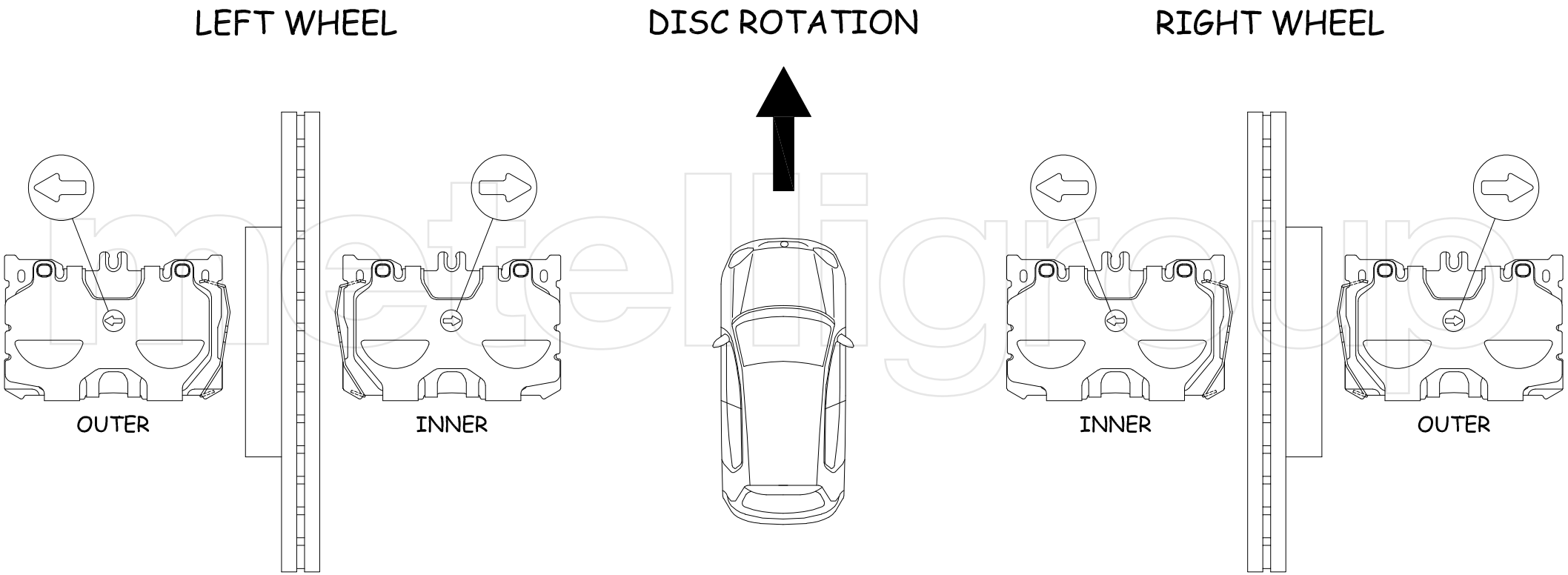

mettellgroup