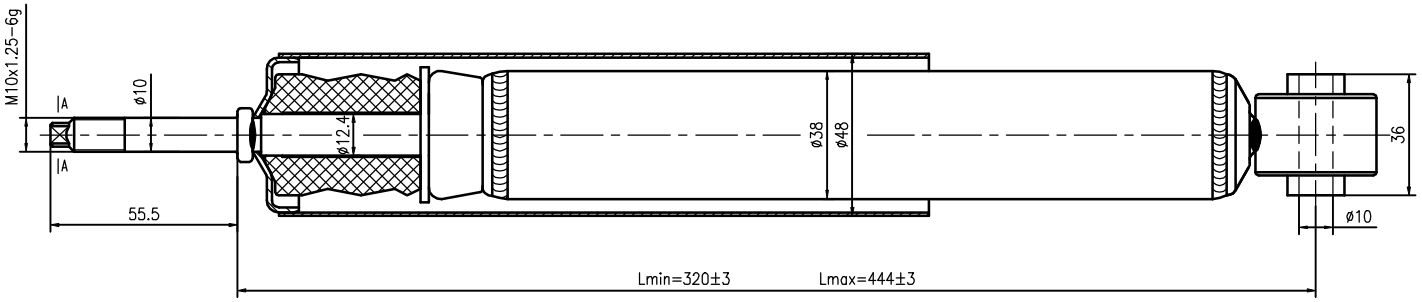
M10x1.25-6g
A
A
ø10
ø12.4
ø38
ø48
36
55.5
ø10
Lmin=320±3
Lmax=444±3
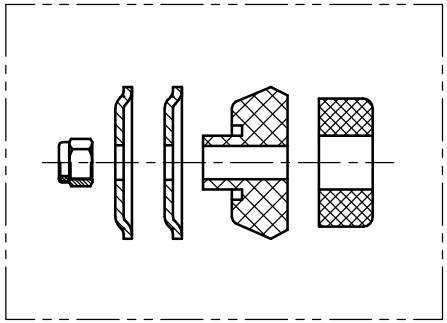
A-A